REVISIONS			
REV.	DESCRIPTION	DATE	APPROVED
NC	Production Release	[illegible]	[illegible]
A	Changed Per ECN 3606	8/7/79	CM D.C.L

PROPRIETARY INFORMATION

THE INFORMATION CONTAINED HEREON IS PROPRIETARY INFORMATION TO L.H. RESEARCH, INC. AND SHALL NOT BE DISCLOSED TO PERSONS AND/OR ORGANIZATIONS OR REPRODUCED, COPIED OR USED AS A BASIS FOR MANUFACTURE OR SALE OF EQUIPMENT OR DEVICES WITHOUT WRITTEN PERMISSION.

INSTRUCTION MANUAL

REGULATED POWER SUPPLY

LHR MODEL TM20 670-682654

FOR REFERENCE ONLY
THIS DOCUMENTATION IS
UNCONTROLLED
CHANGE NOTIFICATION
WILL NOT BE MAINTAINED

DRAFTSMAN [illegible]	DATE [illegible]	LH RESEARCH	1821 Langley Avenue Irvine, CA. 92714 714/546-5279
CHECKER F. Hutchison	[illegible]	INSTRUCTION MANUAL MODEL TM20	
APPR. [illegible]	[illegible]		
TOLERANCE .XX .XXX ANGLE		DWG SIZE A	PRODUCT CODE REF
NEXT ASS'Y / USED ON		DWG NO. 46124	REV. A
APPLICATION	UNLESS OTHERWISE SPECIFIED ALL DIMENSIONS ARE IN INCHES	SCALE	Page 1 of 22 Pages

TABLE OF CONTENTS

Section	Page
Specifications	3-5
Introduction	6
Theory of Operation	6-12
Installation and Operation	13-18
Troubleshooting	19-21
Schematic Ref. 45217	22

SPECIFICATIONS

Input Voltage: 115VAC, 92-130VAC, 47-450Hz.
230VAC, 184-260VAC, 47-450Hz.

Output Voltages: Voltages and load current ratings are given in the following tables:

Table 1 - TM 22

Output Voltage	Rated Load Current (Amps)	
	V1	V2
2		8
5	20	8
12		8
15		6
18		5
24		3
28		3

Table 2 - TM 23

Output Voltage	Rated Load Current (Amps)		
	V1	V2	V3
2		5	5
5	20	5	5
12		5	5
15		4	4
18		3	3
24		2	2
28		2	2

NOTE: A minimum load of 2.5A is required on the main output (V1) to maintain voltage on the auxiliary outputs.

Line Regulation: 0.4% on main output over entire range.
0.4% on 2nd and 3rd.

Load Regulation: 0.4% for no load to full load for main, 2nd and 3rd outputs.

Interaction: 0.1% maximum (static).

Ripple and Noise: 50mV P-P (maximum) for all outputs less than 12 volts.
100mV (maximum) for all outputs 12 volts or greater.

Overvoltage Protection: Standard for main output. Optional on 2nd and 3rd outputs. Factory set at 125±5%.

Overshoots and Undershoots: 2% Peak deviation for a 25% load change at 5A/μs.

Response Time: 200μs to 1% after a 25% load change at 5A/μs for main output. 50μs to 1% after a 25% load change at 5A/μs for 2nd and 3rd outputs.

Holdup Time: Outputs remain in regulation for a minimum of 20Ms after loss of nominal AC power.

Operating Temperature: Full load 0°C to 50°C with natural convection. Derated to 50% of nominal power at 70°C (see derating curve).

Power Derating Curve

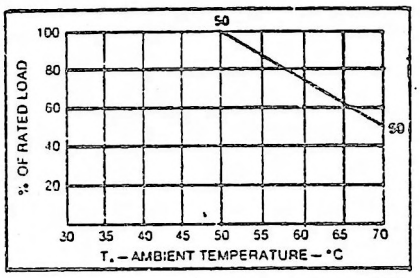

Efficiency: 70% nominal.

Input/Output Connections: Provided through barrier strip for AC input, sense, and DC outputs. Power fail and remote on-off terminate through AMP connector, 350209-1. (Mating part is Amp 1-480318 with socket No. 60996-1).

Output Polarity: Outputs are independent and floating and may be referenced as desired. The output may be floated up to 100V off chassis ground.

Remote Sense: Compensates for up to 5% of nominal output voltage for load cable loss. Output is internally sensed if the sense leads are open. Remote sense applicable for main output only.

Reverse Voltage Protection: Main output has reverse voltage protection up to 100% of rated current. 3A average on all other outputs.

INSTALLATION AND OPERATION

1. The power supply is supplied with mounting provisions that use (3) 8-32 screws.

   NOTE: This power supply is designed for convection cooling. Do not restrict cooling air flow.

2. Input voltage requirements are 92-130VAC or 184-260VAC, 47-450Hz internally selectable. The unit is factory wired for 115V or 230V line as indicated on the name plate. Power supplies with 115-230VAC input voltage may be operated with either voltage. For 115VAC operation, connect jumpers between pins marked 115V. See Figure 6. For 230VAC operation, remove jumpers from pins marked 115V and connect jumper between pins marked 230V.

3. Connect selected input voltage to TB1, AC IN terminal 1, AC COMM to terminal 2 and ground to terminal 3.

4. The main voltage V1 output with remote sense can compensate for up to 250mV drop in the leads. To determine the minimum size wire, divide 0.25V by the output current, then divide by the total length of wire in thousands of feet. This gives Ohms per 1000 feet, and a wire table may be consulted to determine the appropriate wire size needed. Some examples are included in the following table:

AWG	OHMS PER 1000 FT. @20°C.
6	0.3951
8	0.6282
10	0.9989
12	1.588
14	2.525
16	4.016
18	6.835

   Typical Example:

   5V @10-20A supply connected to the load with 4 foot wires, (with 8 ft. total = .008 thousand ft.), #12 wire would be used to insure less than 250mV drop.

5. Connect +V1 output TB1 terminal 6 to (+) point on load.
   Connect -V1 output TB1 terminal 4 to (-) point on load.

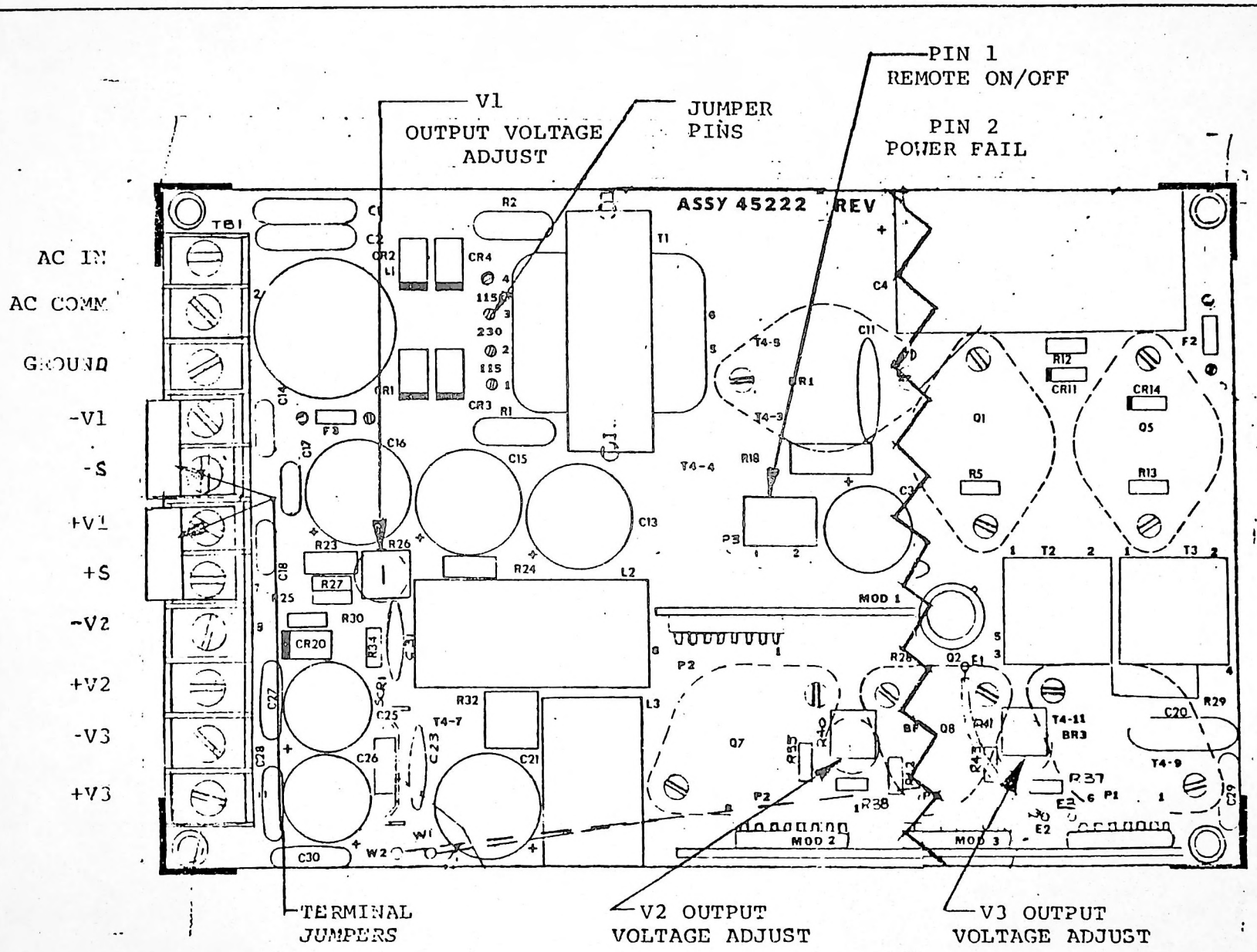

Hookup/Adjustments
Figure 6

6. Power supplies are shipped with the sense leads connected for local sensing.

   NOTE: Step 7 will show how to connect for remote sensing.

7. Connect the +S TB1 terminal 7 (plus sense supply) lead to the (+) point on the main power buss or load.

   Connect the -S TB1 terminal 5 (minus sense supply) lead to the (-) point on the main power buss on load.

   NOTE: Sense leads are #22 or #24 twisted pair and must not exceed 10 feet in length.

   CAUTION: IF POLARITY OF THE SENSE LEADS ARE REVERSED, THE CONTROL SECTION OF THE POWER SUPPLY WILL BE DAMAGED.

8. Connect power fail lead to P3 terminal 2. This signal output is referenced to the main output (-) sense.

9. Remote On/Off control function is connected to P3 terminal 1. The power supply is turned on with open circuit or with TTL logic "1" and is turned off with TTL logic "0" (800mv max.) sinking 400μA referenced to negative sense.

   NOTE: Use AMP Incorporated, Part Number 1-480318 to mate with P3.

10. Connect +V2 output, TB1 terminal 9 to (+) point on load.
    Connect -V2 output, TB1 terminal 8 to (-) point on load.

11. Connect +V3 output, TB1 terminal 11 to (+) point on load.
    Connect -V3 output, TB1 terminal 10 to (-) point on load.

12. Adjust main V1 voltage adjust potentiometer R26 to increase or decrease output voltage. Do not operate the power supply outside its nominal range.

13. Adjust V2 voltage adjust potentiometer R40 to increase or decrease output voltage.

    NOTE: Auxiliary output voltage V2 and V3 will not be present unless main output V1 is loaded to a minimum load. The minimum load for 5V main output is 2.5A. For minimum load current on other outputs, contact the factory.

14. Adjust V3 voltage adjust potentiometer R41 to increase or decrease output voltage.

15. Perform the following steps before operating the TM20 power supplies in parallel.

A. Adjust the main output voltage of each power supply within 0.1% of the other. These adjustments must be accomplished at 80 to 90% of full load, with the sense leads tied at the output terminals. The output voltage should be set high enough to allow for the estimated drop in the conductors, (due to load current) beyond the sense terminals.

B. Adjust the current limit on each power supply for 90 to 100% of the rating.

C. The procedures outlines above will insure that the power supplies connected in parallel will share the load current reasonable well throughout its operating range and result in maximum reliability.

CAUTION: WHEN USING MULTIPLE OUTPUT POWER SUPPLIES IN PARALLEL, INSURE THAT THE TOTAL LOAD ON THE MAIN OUTPUTS IS GREATER THAN THE MINIMUM RATED LOAD OF THESE OUTPUTS. IF THE LOAD CURRENT ON THE MAIN OUTPUT DROPS BELOW THE MINIMUM, THE AUXILIARY OUTPUTS MAY FAIL TO DELIVER RATED LOAD CURRENT.

D. The connection diagrams for power supplies operating in parallel are shown in Figure 7.

NOTE: The adjustments described below are preset at final test and are for information only. Consult factory when requirements change. Changes in adjustments can cause loss of protective features of this power supply.

16. Adjust the V1 pot R26 clockwise until the output reaches about 20% high. Turning pot R23 on the control module clockwise will make the OVP circuit trigger at a higher voltage. The minimum trigger point is around 20% high. This adjustment is most easily made when the main output is loaded to less than 50% of rating.

ACCEPTABLE

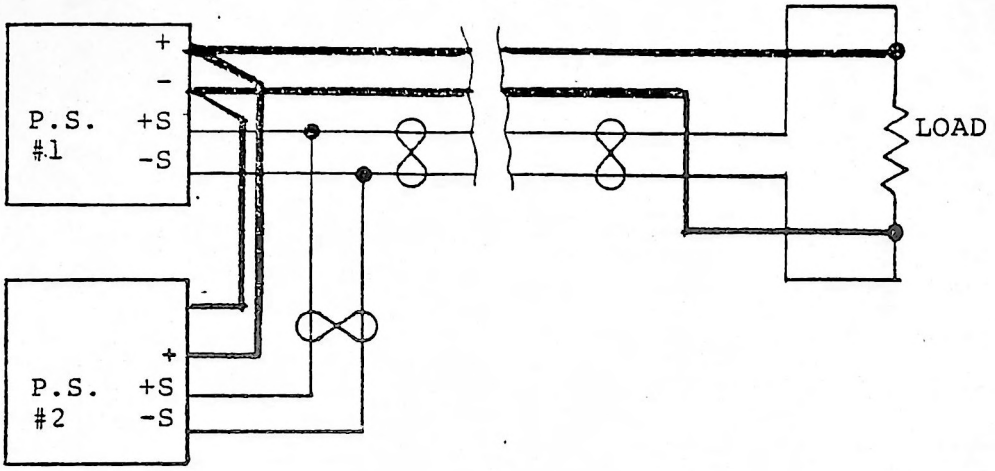

PREFERRED

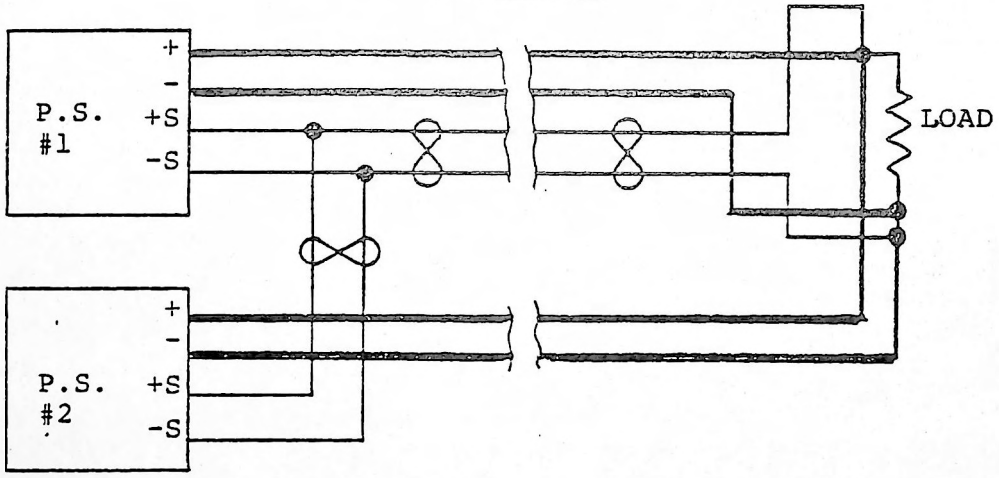

NOTE: Load conductors should be same size and length, for proper load sharing.

Typical Parallel Diagram
Figure 7

17. With the line set at 115VAC, adjust the current limit pot R20 until the outputs begin to fall with outputs loaded for 200W of total power. This power level should be maintained for no longer than 30 seconds while making this adjustment.

CAUTION: THE OVER CURRENT PROTECTION FOR THE MAIN OUTPUT IS PROVIDED ON THE PRIMARY CURRENT SENSE, WHICH INCLUDES THE REFLECTED LOAD OF BOTH THE MAIN OUTPUT AND AUXILIARY OUTPUTS. ALTHOUGH THE MAIN OUTPUT IS PROTECTED AGAINST OVERLOAD INCLUDING SHORT CIRCUIT ACROSS ITS OUTPUT TERMINALS, DAMAGE MAY RESULT IF THE MAIN OUTPUT IS OPERATED BEYOND ITS SPECIFIED RATING (WITH THE AUXILIARY OUTPUTS LIGHTLY LOADED).

18. Connect scope probe to terminal 2, P3. Adjust scope for 2V/Cm, 5MS/CM, external trigger. Adjust scope to trigger at AC line turn-off. Adjust power fail pot R9, on the control module, until delay between line turn-off and power fail signal fall is greater than 16 Ms. (See specifications).

19. Adjust the V2 pot R40 clockwise until the output reaches about 20% high. Turning pot R5 on the series regulator module #2 clockwise will make the OVP circuit trigger at a higher voltage. The minimum trigger point is around 20% high. This adjustment is most easily made when the main output is loaded to less than 50% of rating.

20. Repeat the above step using V3 controls.

21. With the line set at 115VAC and V2 output loaded for 115% of rated current, adjust V2 current limit pot R7 on the series regulator module #2 until the output begins to fall. This power level should be maintained for no longer than 30 seconds while making this adjustment.

22. Repeat the above step using V3 controls.

TROUBLESHOOTING

1. General

This section describes troubleshooting test analysis routine, and some procedures that are useful in servicing this power supply. Refer to the section on specifications for minimum performance standards.

2. Troubleshooting Procedures

No output voltage will probably be the most common failure mode of this power supply. Make certain the following items are checked before proceeding further:

A. Check to make sure the supply is properly hooked up.

B. Check the AC input voltage at the AC input terminals.

C. Remove the load from the supply to see if the supply will come up under a no-load condition. If it does, this would indicate there may be a short or overload condition in the load.

D. When checking the auxiliary outputs of the multiple output section, make sure there is a 2.5A minimum load on the main output.

3. Troubleshooting Output Filter and Power Output Section

Shorts in the power output section can be determined with an ohmmeter.

Set the meter at the Rx 1 scale. Touch the plus lead to the plus output and the minus lead to the minus output.

Under normal conditions, there should be partial meter deflection and then a gradual increase in resistance as the meter will be charging the output filter capacitors.

If there is an internal short, the meter will read a very low resistance. When the meter leads are reversed, you will normally read a very low resistance because of the low forward resistance of the rectifiers. If a short is present, this could mean a shorted output rectifier or a shorted output filter capacitor. To check the rectifiers it will be necessary to remove the rectifier from the power supply assembly. The rectifiers can then be checked with an ohmmeter.

WARNING: ALWAYS MAKE SURE THE POWER SUPPLY HAS BEEN TURNED OFF FOR AT LEAST TWO MINUTES BEFORE WORKING INSIDE THE UNIT TO ALLOW THE VOLTAGE TO DISCHARGE FROM THE INPUT CAPACITORS.

4. Troubleshooting Input Section

Check the external AC fuse and if blown, replace with the same type and value. If the fuse blows again, it indicates a short in the AC input section.

If the supply continues to blow the AC input fuse when power is applied, check the four (4) input power rectifiers mounted on the PC board with an ohmmeter. Check the input filter capacitors for possible shorted conditions.

If the AC is present to the rectifiers and the high voltage is missing at the filter capacitors, check for an open thermistor. The proper voltage across the input capacitors C4 and C9, with nominal input voltage, should be about 150 volts DC across each capacitor. If there is no voltage across the input capacitor, check for an open connection. Examine the thermistors R1 and R2. The resistance of these thermistors should read about 2.5 ohms or 5 ohms when cool.

If normal voltage is present on input capacitors, check the DC fuses between the high voltage capacitors and the power transistors. If open, it will most likely indicate a power transistor failure or an internal short. Check the power transistors and clamp diodes for shorts. A shorted clamp diode maybe the cause of power transistor failure.

If a replacement power transistor is required, it is recommended that they are all replaced with a new tested set from LH Research. For optimum performance, the set is matched for storage time and switching speed.

When replacing power transistors, make certain the insulators are thoroughly greased with a thermal compound, and the mounting surfaces are free of burrs and foreign materials. Recheck the clamping diodes across emitter to collector of the power transistors to be sure none are shorted. Check the power transistor base voltage waveforms per step 5.

5. Check Power Transistor Base Voltage Waveforms

Set oscilloscope vertical sensitivity to .5V/Div. Set Sweep to 5μs/Div. Remove the internal fuses F1 and F2. This will remove the 300 volts from the power switching transistors.

CAUTION: BEFORE MAKING ANY OSCILLOSCOPE MEASUREMENT, ISOLATE THE SCOPE CHASSIS FROM THE AC LINE WITH AN ISOLATION PLUG OR TRANSFORMER. MAKING SURE THAT THE SCOPE CHASSIS IS ISOLATED FROM EARTH GROUND. SCOPE CHASSIS MAY BE ELECTRICALLY HOT WHILE MAKING THE FOLLOWING MEASUREMENTS.

Observe the Q1 and Q5 base-emitter voltage waveform by hooking scope across R5 and R13 with scope ground on emitter side of Q1 and Q5. See Figure 5 for proper waveform. Turn the AC power off and replace the DC fuses F1 and F2.

If no basic voltage waveforms are present. Check the +24 volts on the control board. With reference to the minus main output terminal, the 24 volts should be between 22 and 25 volts.

If the voltage is low or none, check fuse F3. If the fuse is open, check CR 5, 6, 7, 8, 9 and 10 for possible short. If the diodes are good, replace F3 with same type and value.

If the fuse blows again or the base voltage waveforms are not present, the unit should be returned to the factory for repairs.

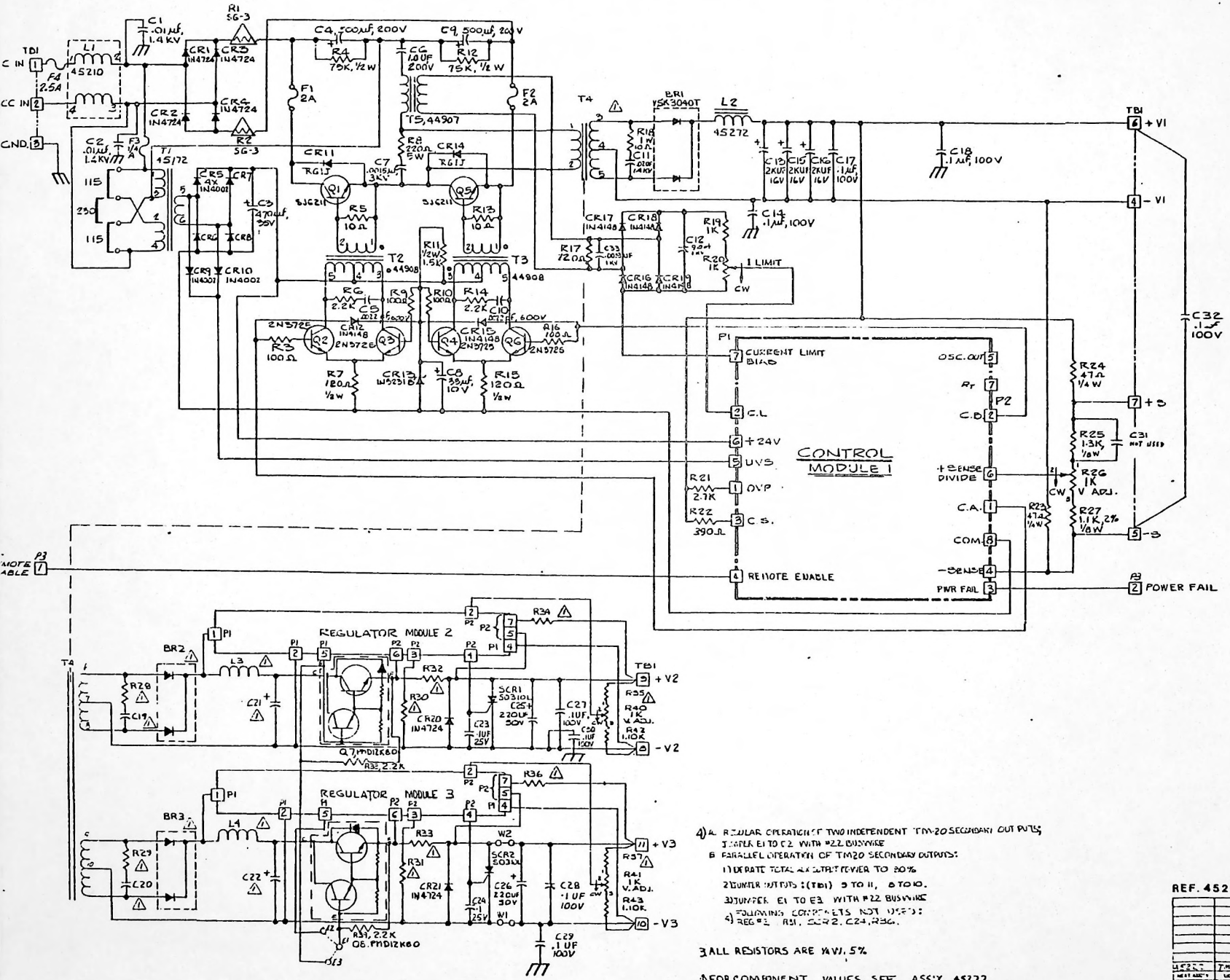

4) A. REGULAR OPERATION OF TWO INDEPENDENT TM-20 SECONDARY OUTPUTS; JUMPER E1 TO E2 WITH #22 BUSWIRE

B. PARALLEL OPERATION OF TM20 SECONDARY OUTPUTS:

1) DERATE TOTAL AUX OUTPUT POWER TO 30%

2) JUMPER OUTPUTS: (TB1) 9 TO 11, 8 TO 10.

3) JUMPER E1 TO E3 WITH #22 BUSWIRE

4) FOLLOWING COMPONENTS NOT USED: REG #2, R31, SCR2, C24, R36.

3 ALL RESISTORS ARE ¼W, 5%

1 FOR COMPONENT VALUES SEE ASS'Y 45222

NOTES: UNLESS OTHERWISE SPECIFIED

REF. 45217 REV. K

DRAFTSMAN	JIN	DATE	8-11-7
CHECKER			
APPR.			
NEXT ASSY	45222	USED ON	TM20
APPLICATION			

LH RESEARCH

SCHEMATIC, POWER SUPPLY

SIZE	PRODUCT CODE	DWG NO.	REV
B	REF	46124	A

SCALE ~